查询MT4LC4M16N3TG-5供应商

DRAM

MT4LC4M16R6, MT4LC4M16N3

For the latest data sheet, please refer to the Micron Web site: www.micronsemi.com/mti/msp/html/datasheet.html

FEATURES

- Single +3.3V ±0.3V power supply
- Industry-standard x16 pinout, timing, functions, and package
- 12 row, 10 column addresses (R6)
  13 row, 9 column addresses (N3)
- High-performance CMOS silicon-gate process
- All inputs, outputs and clocks are LVTTL-compatible
- Extended Data-Out (EDO) PAGE MODE access
- 4,096-cycle CAS#-BEFORE-RAS# (CBR) REFRESH distributed across 64ms
- Optional self refresh (S) for low-power data retention

OPTIONS	MARKING
• Plastic Package	
50-pin TSOP (400 mil)	TG
• Timing	
50ns access	-5
60ns access	-6
• Refresh Rates	
4K	R6
8K	N3
Standard Refresh	None
Self Refresh	S*
• Operating Temperature Range	
Commercial (0°C to +70°C)	None
Extended (-40°C to +85°C)	IT**

NOTE: 1. The "#" symbol indicates signal is active LOW.

*Contact factory for availability.
**Available only on MT4LC4M16R6 standard refresh device.

Part Number Example:
MT4LC4M16R6TG-5

KEY TIMING PARAMETERS

SPEED	^tRC	^tRAC	^tPC	^tAA	^tCAC	^tCAS
-5	84ns	50ns	20ns	25ns	13ns	8ns
-6	104ns	60ns	25ns	30ns	15ns	10ns

PIN ASSIGNMENT (Top View)
50-Pin TSOP

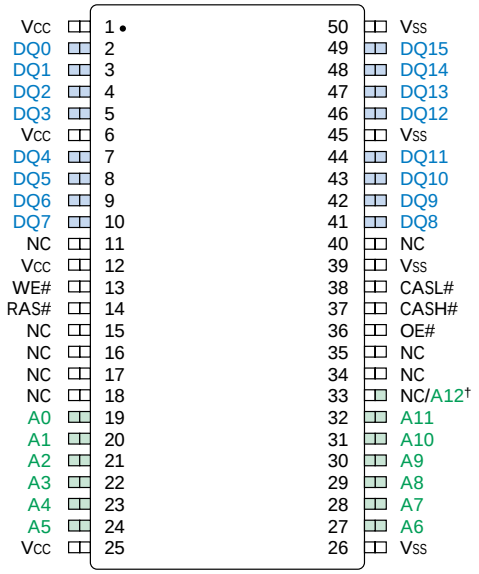

†A12 for N3 version, NC for R6 version.

	MT4LC4M16R6	MT4LC4M16N3
Configuration	4 Meg x 16	4 Meg x 16
Refresh	4K	8K
Row Address	4K (A0-A11)	8K (A0-A12)
Column Addressing	1K (A0-A9)	512 (A0-A8)

4 MEG x 16 EDO DRAM PART NUMBERS

PART NUMBER	REFRESH ADDRESSING	PACKAGE	REFRESH
MT4LC4M16R6TG-x	4K	400-TSOP	Standard
MT4LC4M16R6TG-x S	4K	400-TSOP	Self
MT4LC4M16N3TG-x	8K	400-TSOP	Standard
MT4LC4M16N3TG-x S	8K	400-TSOP	Self

x = speed

Micron Technology, Inc., reserves the right to change products or specifications without notice.
©2000, Micron Technology, Inc.

FUNCTIONAL BLOCK DIAGRAM
MT4LC4M16R6 (12 row addresses)

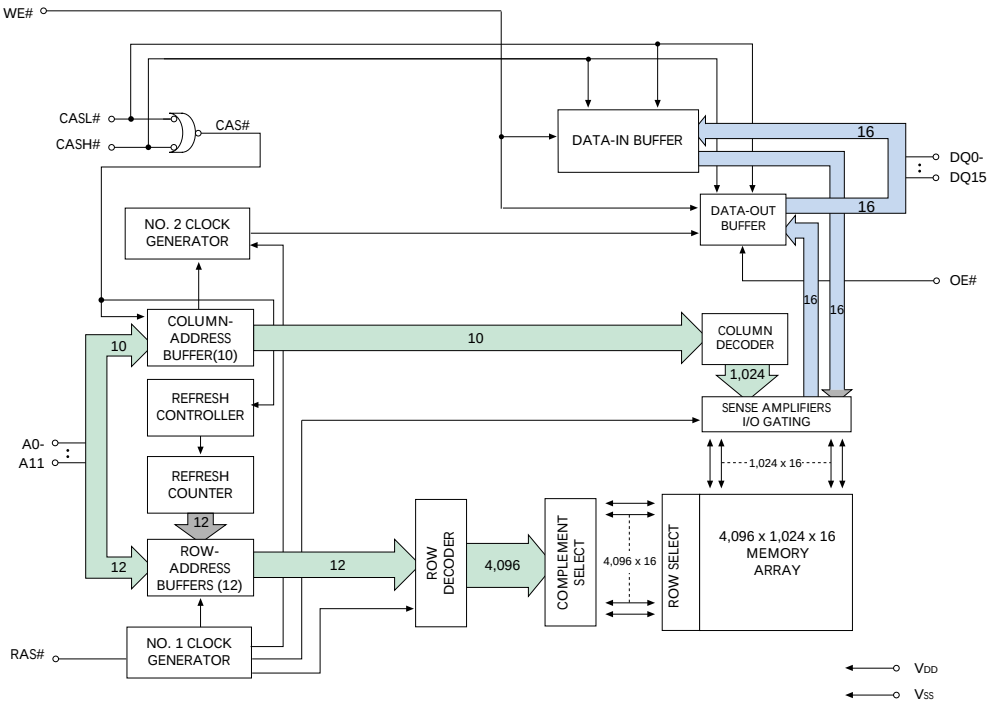

FUNCTIONAL BLOCK DIAGRAM
MT4LC4M16N3 (13 row addresses)

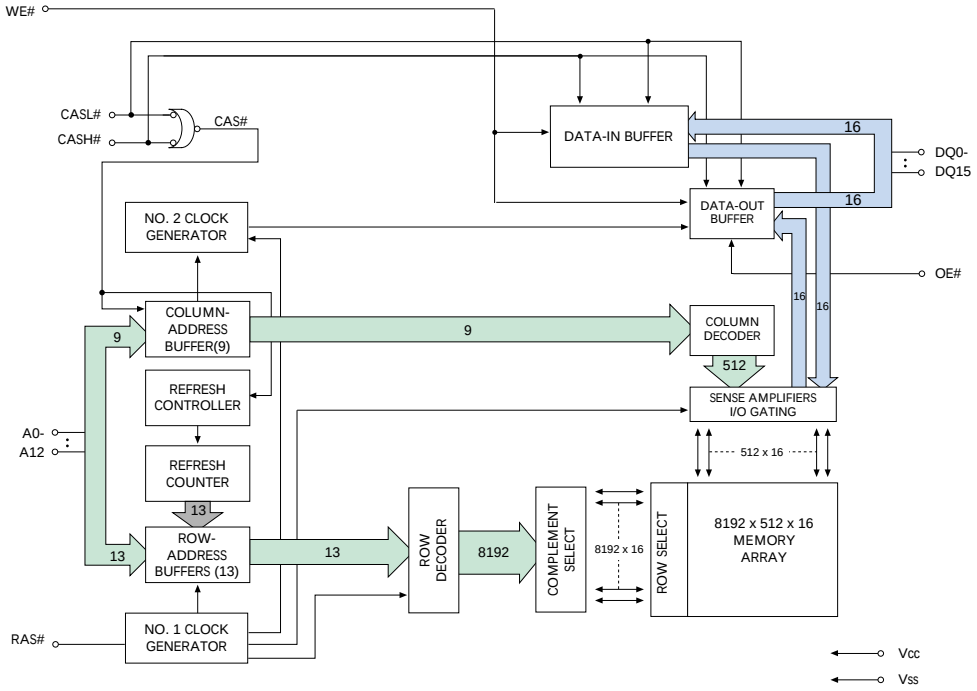

Micron Technology, Inc., reserves the right to change products or specifications without notice.
©2000, Micron Technology, Inc.

GENERAL DESCRIPTION

The 4 Meg x 16 DRAM is a high-speed CMOS, dynamic random-access memory device containing 67,108,864 bits and designed to operate from 3V to 3.6V. The device is functionally organized as 4,194,304 locations containing 16 bits each. The 4,194,304 memory locations are arranged in 4,096 rows by 1,024 columns on the MT4LC4M16R6 or 8,192 rows by 512 columns on the MT4LC4M16N3. During READ or WRITE cycles, each location is uniquely addressed via the address bits: 12 row-address bits (A0-A11) and 10 column-address bits (A0-A9) on the MT4LC4M16R6 or 13 row-address bits (A0-A12) and 9 column-address bits (A0-A8) on the MT4LC4M16N3 version. In addition, both byte and word accesses are supported via the two CAS# pins (CASL# and CASH#).

The CAS# functionality and timing related to address and control functions (e.g., latching column addresses or selecting CBR REFRESH) is such that the internal CAS# signal is determined by the first external CAS# signal (CASL# or CASH#) to transition LOW and the last to transition back HIGH. The CAS# functionality and timing related to driving or latching data is such that each CAS# signal independently controls the associated eight DQ pins.

The row address is latched by the RAS# signal, then the column address is latched by CAS#. This device provides EDO-PAGE-MODE operation, allowing for fast successive data operations (READ, WRITE or READ-MODIFY-WRITE) within a given row.

The 4 Meg x 16 DRAM must be refreshed periodically in order to retain stored data.

DRAM ACCESS

Each location in the DRAM is uniquely addressable, as mentioned in the General Description. Use of both CAS# signals results in a word access via the 16 I/O pins (DQ0-DQ15). Using only one of the two signals results in a BYTE access cycle. CASL# transitioning LOW selects an access cycle for the lower byte (DQ0-DQ7), and CASH# transitioning LOW selects an access cycle for

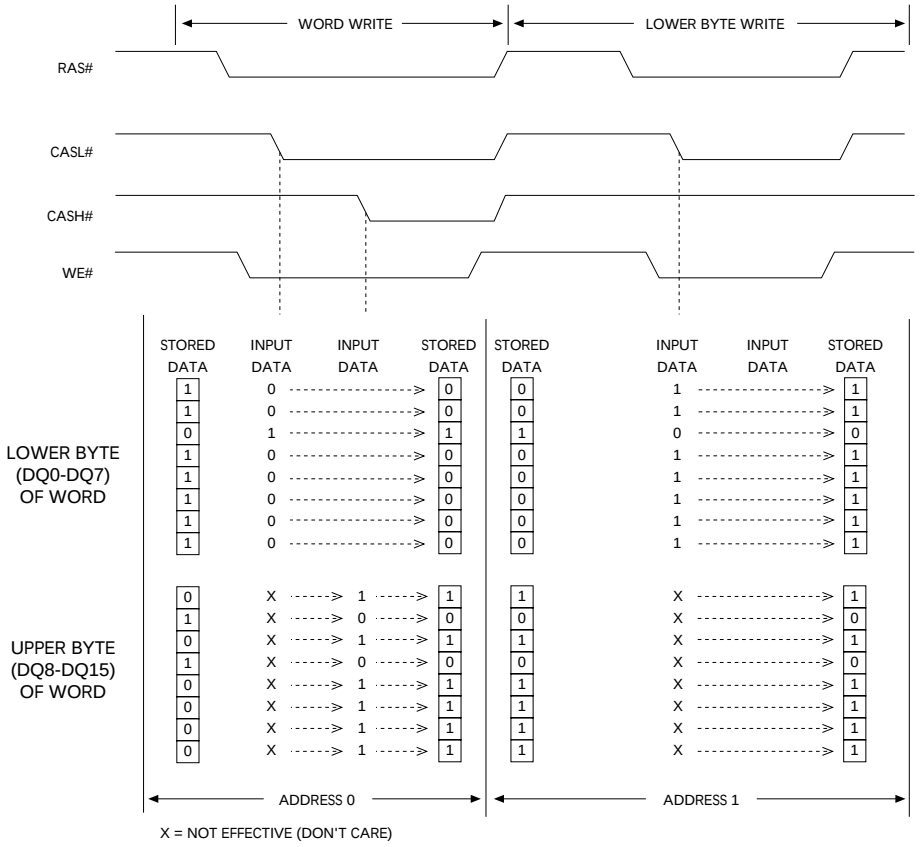

Figure 1
WORD and BYTE WRITE Example

Micron Technology, Inc., reserves the right to change products or specifications without notice.
©2000, Micron Technology, Inc.

DRAM ACCESS (continued)

the upper byte (DQ8-DQ15). General byte and word access timing is shown in Figures 1 and 2.

A logic HIGH on WE# dictates read mode, while a logic LOW on WE# dictates write mode. During a WRITE cycle, data-in (D) is latched by the falling edge of WE or CAS# (CASL# or CASH#), whichever occurs last. An EARLY WRITE occurs when WE is taken LOW prior to either CAS# falling. A LATE WRITE or READ-MODIFY-WRITE occurs when WE falls after CAS# (CASL# or CASH#) is taken LOW. During EARLY WRITE cycles, the data outputs (Q) will remain High-Z, regardless of the state of OE#. During LATE WRITE or READ-MODIFY-WRITE cycles, OE# must be taken HIGH to disable the data outputs prior to applying input data. If a LATE WRITE or READ-MODIFY-WRITE is attempted while keeping OE# LOW, no write will occur, and the data outputs will drive read data from the accessed location.

Additionally, both bytes must always be of the same mode of operation if both bytes are active. A CAS# precharge must be satisfied prior to changing modes of operation between the upper and lower bytes. For example, an EARLY WRITE on one byte and a LATE WRITE on the other byte are not allowed during the same cycle. However, an EARLY WRITE on one byte and a LATE WRITE on the other byte, after a CAS# precharge has been satisfied, are permissible.

EDO PAGE MODE

DRAM READ cycles have traditionally turned the output buffers off (High-Z) with the rising edge of CAS#. If CAS# went HIGH and OE# was LOW (active), the output buffers would be disabled. The 64Mb EDO DRAM offers an accelerated page mode cycle by eliminating output disable from CAS# HIGH. This option is called EDO, and it allows CAS# precharge time (^{t}CP) to occur without the output data going invalid (see READ and EDO-PAGE-MODE READ waveforms).

EDO operates like any DRAM READ or FAST-PAGE-MODE READ, except data is held valid after CAS# goes HIGH, as long as RAS# and OE# are held LOW and WE# is held HIGH. OE# can be brought LOW or HIGH while CAS# and RAS# are LOW, and the DQs will transition between valid data and High-Z. Using OE#, there are

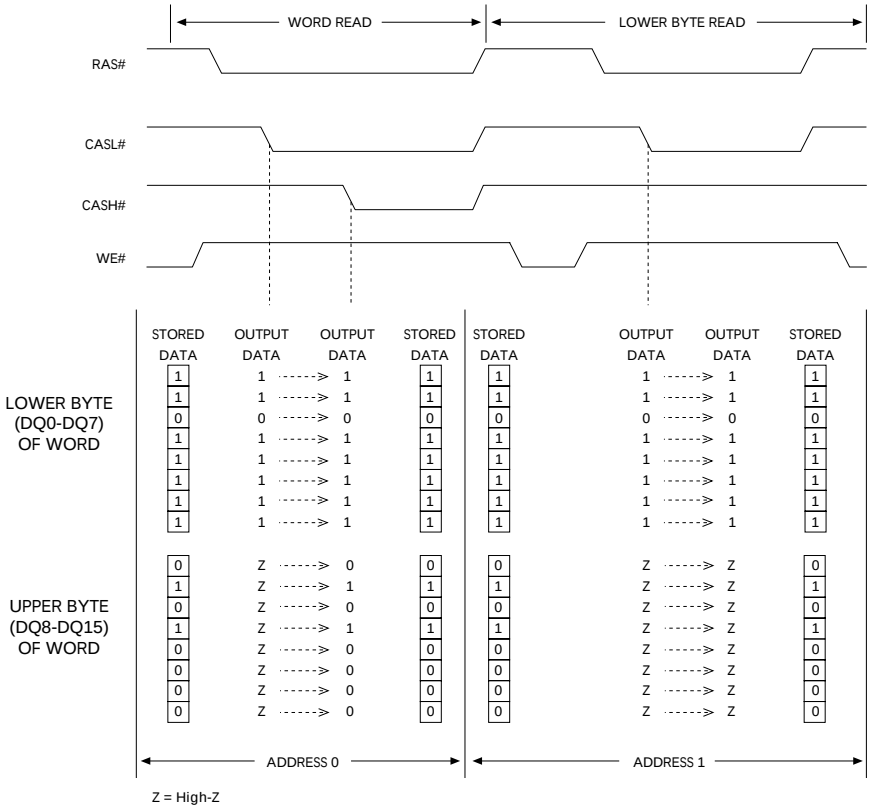

Figure 2
WORD and BYTE READ Example

Micron Technology, Inc., reserves the right to change products or specifications without notice.
©2000, Micron Technology, Inc.

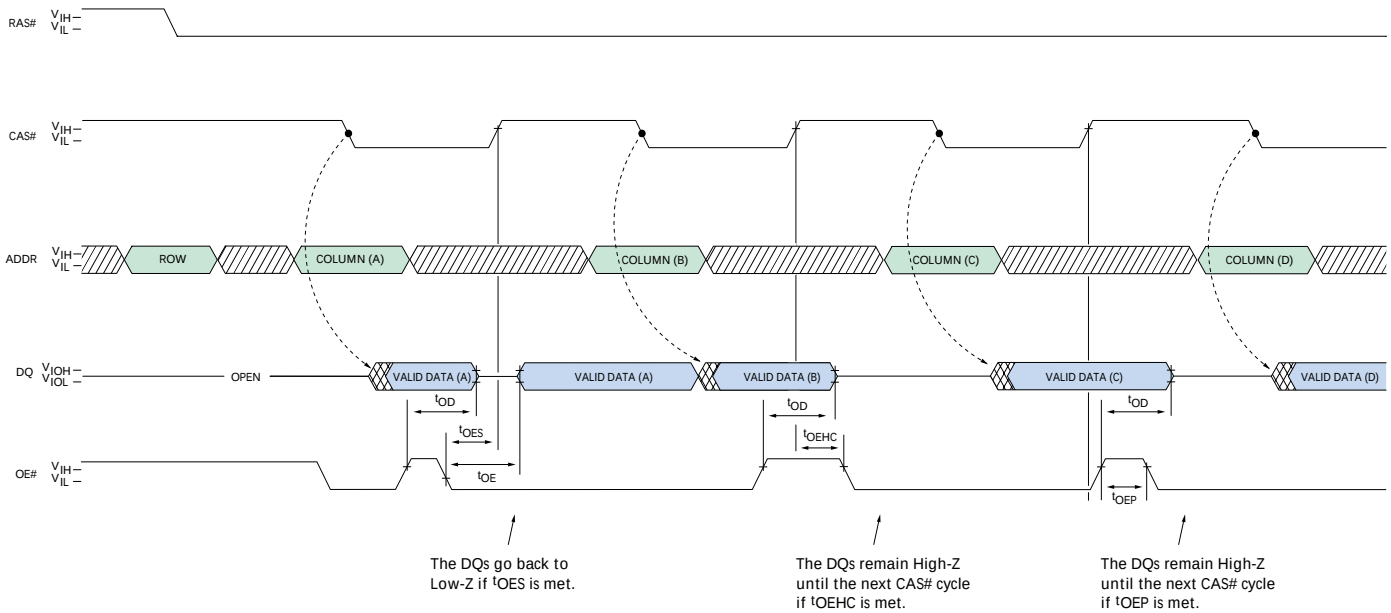

Figure 3
OE# Control of DQs

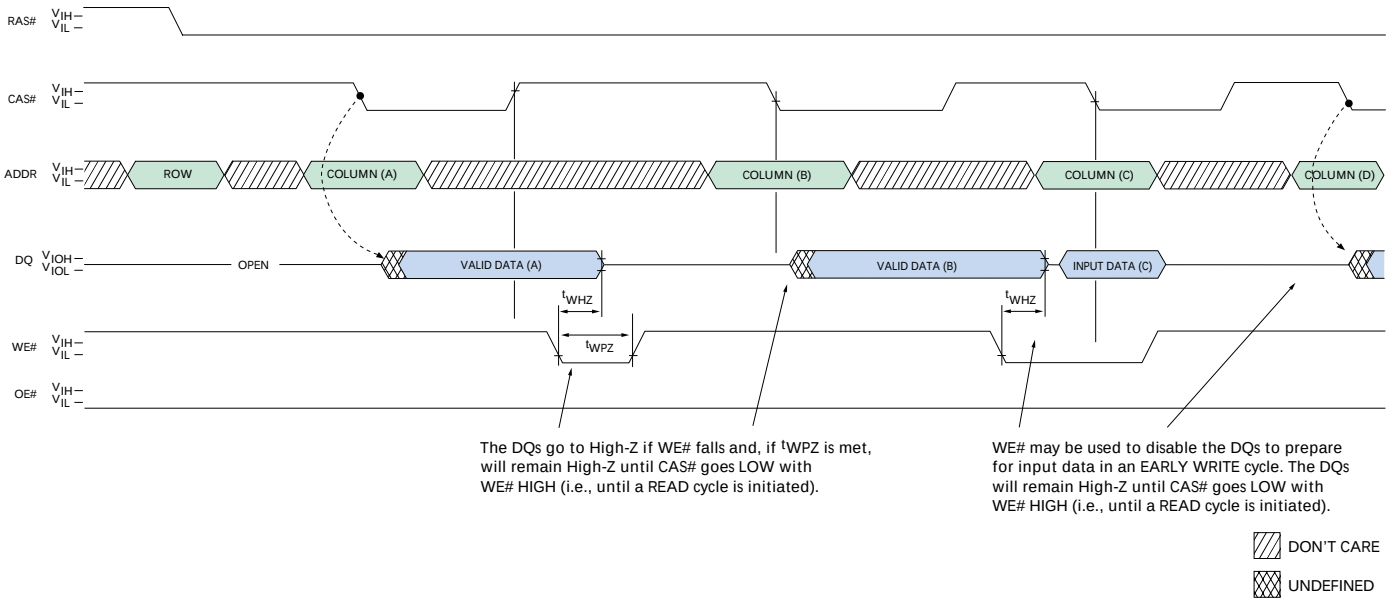

Figure 4
WE# Control of DQs

Micron Technology, Inc., reserves the right to change products or specifications without notice.
©2000, Micron Technology, Inc.

EDO PAGE MODE (continued)

two methods to disable the outputs and keep them disabled during the CAS# HIGH time. The first method is to have OE# HIGH when CAS# transitions HIGH and keep OE# HIGH for ^{t}OEHC thereafter. This will disable the DQs, and they will remain disabled (regardless of the state of OE# after that point) until CAS# falls again. The second method is to have OE# LOW when CAS# transitions HIGH and then bring OE# HIGH for a minimum of ^{t}OEP anytime during the CAS# HIGH period. This will disable the DQs, and they will remain disabled (regardless of the state of OE# after that point) until CAS# falls again (see Figure 3). During other cycles, the outputs are disabled at ^{t}OFF time after RAS# and CAS# are HIGH or at ^{t}WHZ after WE# transitions LOW. The ^{t}OFF time is referenced from the rising edge of RAS# or CAS#, whichever occurs last. WE# can also perform the function of disabling the output drivers under certain conditions, as shown in Figure 4.

EDO-PAGE-MODE operations are always initiated with a row address strobed in by the RAS# signal, followed by a column address strobed in by CAS#, just like for single location accesses. However, subsequent column locations within the row may then be accessed at the page mode cycle time. This is accomplished by cycling CAS# while holding RAS# LOW and entering new column addresses with each CAS# cycle. Returning RAS# HIGH terminates the EDO-PAGE-MODE operation.

DRAM REFRESH

The supply voltage must be maintained at the specified levels, and the refresh requirements must be met in order to retain stored data in the DRAM. The refresh requirements are met by refreshing all rows in the 4 Meg x 16 DRAM array at least once every 64ms (8,192 rows for N3 or 4,096 rows for R6). The recommended procedure is to execute 4,096 CBR REFRESH cycles, either uniformly spaced or grouped in bursts, every 64ms. The MT4LC4M16N3 internally refreshes two rows for each CBR cycle, whereas the MT4LC4M16R6 refreshes one row for every CBR cycle. For either device, executing 4,096 CBR cycles will refresh the entire device. The CBR REFRESH will invoke the internal refresh counter for automatic RAS# addressing. Alternatively, RAS#-ONLY REFRESH capability is inherently provided. However, with this method, only one row is refreshed on each cycle. Thus, 8,192 RAS-only REFRESH cycles are needed every 64ms on the MT4LC4M16N3 in order to refresh the entire device. JEDEC strongly recommends the use of CBR REFRESH for this device.

An optional self refresh mode is also available on the "S" version. The self refresh feature is initiated by performing a CBR Refresh cycle and holding RAS# low for the specified ^{t}RASS. The "S" option allows the user the choice of a fully static, low-power data retention mode or a dynamic refresh mode at the extended refresh period of 128ms, or 31.25µs per cycle, when using a distributed CBR refresh. This refresh rate can be applied during normal operation, as well as during a standby or battery backup mode.

The self refresh mode is terminated by driving RAS# HIGH for a minimum time of ^{t}RPS. This delay allows for the completion of any internal refresh cycles that may be in process at the time of the RAS# LOW-to-HIGH transition. If the DRAM controller uses a distributed CBR refresh sequence, a burst refresh is not required upon exiting self refresh, however, if the controller is using RAS# only or burst CBR refresh then a burst refresh using ^{t}RC (MIN) is required.

Micron Technology, Inc., reserves the right to change products or specifications without notice.
©2000, Micron Technology, Inc.

ABSOLUTE MAXIMUM RATINGS*

Voltage on V_{CC} Relative to V_{SS} ..... -1V to +4.6V
Voltage on NC, Inputs or I/O Pins
Relative to V_{SS} ..... -1V to +4.6V
Operating Temperature, T_A (ambient)
Commercial ..... 0°C to +70°C
Extended (IT) ..... -40°C to +85°C**
Storage Temperature (plastic) ..... -55°C to +150°C
Power Dissipation 1W

*Stresses greater than those listed under "Absolute Maximum Ratings" may cause permanent damage to the device. This is a stress rating only, and functional operation of the device at these or any other conditions above those indicated in the operational sections of this specification is not implied. Exposure to absolute maximum rating conditions for extended periods may affect reliability.
**Available only on MT4LC4M16R6 standard refresh device.

DC ELECTRICAL CHARACTERISTICS AND OPERATING CONDITIONS

(Note: 1) (V_{CC} = +3.3V ±0.3V)

PARAMETER/CONDITION	SYMBOL	MIN	MAX	UNITS	NOTES
SUPPLY VOLTAGE	V_{CC}	3	3.6	V	
INPUT HIGH VOLTAGE: Valid Logic 1; All inputs, I/Os and any NC	V_{IH}	2	V_{CC} + 0.3	V	35
INPUT LOW VOLTAGE: Valid Logic 0; All inputs, I/Os and any NC	V_{IL}	-0.3	0.8	V	35
INPUT LEAKAGE CURRENT: Any input at V_{IN} (0V ≤ V_{IN} ≤ V_{CC} + 0.3V); All other pins not under test = 0V	I_I	-2	2	µA	36
OUTPUT HIGH VOLTAGE: I_{OUT} = -2mA	V_{OH}	2.4	–	V	
OUTPUT LOW VOLTAGE: I_{OUT} = 2mA	V_{OL}	–	0.4	V	
OUTPUT LEAKAGE CURRENT: Any output at V_{OUT} (0V ≤ V_{OUT} ≤ V_{CC} + 0.3V); DQ is disabled and in High-Z state	I_{OZ}	-5	5	µA	

Micron Technology, Inc., reserves the right to change products or specifications without notice.
©2000, Micron Technology, Inc.

Icc OPERATING CONDITIONS AND MAXIMUM LIMITS

(Notes: 1, 2, 3, 5, 6) (V_{CC} = +3.3V ±0.3V)

PARAMETER/CONDITION	SYMBOL	SPEED	MAX 4K	MAX 8K	UNITS	NOTES
STANDBY CURRENT: TTL (RAS# = CAS# = V_{IH})	I_{CC1}	ALL	1	1	mA	
STANDBY CURRENT: CMOS (RAS# = CAS# ≥ V_{CC} - 0.2V; DQs may be left open; Other inputs: V_{IN} ≥ V_{CC} - 0.2V or V_{IN} ≤ 0.2V)	I_{CC2}	ALL	500	500	µA	
OPERATING CURRENT: Random READ/WRITE Average power supply current (RAS#, CAS#, address cycling: ^tRC = ^tRC [MIN])	I_{CC3}	-5 -6	150 165	115 130	mA	26
OPERATING CURRENT: EDO PAGE MODE Average power supply current (RAS# = V_{IL}, CAS#, address cycling: ^tPC = ^tPC [MIN])	I_{CC4}	-5 -6	120 125	120 125	mA	26
REFRESH CURRENT: RAS#-ONLY Average power supply current (RAS# cycling, CAS# = V_{IH}: ^tRC = ^tRC [MIN])	I_{CC5}	-5 -6	150 165	115 130	mA	22
REFRESH CURRENT: CBR Average power supply current (RAS#, CAS#, address cycling: ^tRC = ^tRC [MIN])	I_{CC6}	-5 -6	150 165	150 165	mA	4, 7, 23
REFRESH CURRENT: Extended ("S" version only) Average power supply current: CAS# = 0.2V or CBR cycling; RAS# = ^tRAS (MIN); WE# = V_{CC} - 0.2V; A0-A10, OE# and D_{IN} = V_{CC} - 0.2V or 0.2V (D_{IN} may be left open); ^tRC = 125µs	I_{CC7}	ALL	400	400	µA	4, 7, 23, 37
REFRESH CURRENT: Self ("S" version only) Average power supply current: CBR with RAS# ≥ ^tRASS (MIN) and CAS# held LOW; WE# = V_{CC} - 0.2V; A0-A10, OE# and D_{IN} = V_{CC} - 0.2V or 0.2V (D_{IN} may be left open)	I_{CC8}	ALL	350	350	µA	4, 7, 37

Micron Technology, Inc., reserves the right to change products or specifications without notice.
©2000, Micron Technology, Inc.

CAPACITANCE

(Note: 2)

PARAMETER	SYMBOL	MAX	UNITS
Input Capacitance: Address pins	C_{I1}	5	pF
Input Capacitance: RAS#, CAS#, WE#, OE#	C_{I2}	7	pF
Input/Output Capacitance: DQ	C_{IO}	7	pF

AC ELECTRICAL CHARACTERISTICS

(Notes: 5, 6, 7, 8, 9, 10, 11, 12) (V_{CC} = +3.3V ±0.3V)

AC CHARACTERISTICS		-5		-6			
PARAMETER	SYMBOL	MIN	MAX	MIN	MAX	UNITS	NOTES
Access time from column address	^tAA		25		30	ns	
Column-address setup to CAS# precharge	^tACH	12		15		ns	
Column-address hold time (referenced to RAS#)	^tAR	38		45		ns	
Column-address setup time	^tASC	0		0		ns	28
Row-address setup time	^tASR	0		0		ns	28
Column address to WE# delay time	^tAWD	42		49		ns	18
Access time from CAS#	^tCAC		13		15	ns	29
Column-address hold time	^tCAH	8		10		ns	28
CAS# pulse width	^tCAS	8	10,000	10	10,000	ns	30, 32
CAS# LOW to "Don't Care" during Self Refresh	^tCHD	15		15		ns	
CAS# hold time (CBR Refresh)	^tCHR	8		10		ns	4, 31
Last CAS# going LOW to first CAS# to return HIGH	^tCLCH	5		5		ns	31
CAS# to output in Low-Z	^tCLZ	0		0		ns	29
Data output hold after CAS# LOW	^tCOH	3		3		ns	
CAS# precharge time	^tCP	8		10		ns	13, 33
Access time from CAS# precharge	^tCPA		28		35	ns	29
CAS# to RAS# precharge time	^tCRP	5		5		ns	31
CAS# hold time	^tCSH	38		45		ns	31
CAS# setup time (CBR Refresh)	^tCSR	5		5		ns	4, 28
CAS# to WE# delay time	^tCWD	28		35		ns	18, 28
WRITE command to CAS# lead time	^tCWL	8		10		ns	31
Data-in hold time	^tDH	8		10		ns	19, 29
Data-in setup time	^tDS	0		0		ns	19, 29
Output disable	^tOD	0	12	0	15	ns	24, 25
Output enable time	^tOE		12		15	ns	20
OE# hold time from WE# during READ-MODIFY-WRITE cycle	^tOEH	8		10		ns	25
OE# HIGH hold time from CAS# HIGH	^tOEHC	5		10		ns	
OE# HIGH pulse width	^tOEP	5		5		ns	
OE# LOW to CAS# HIGH setup time	^tOES	4		5		ns	
Output buffer turn-off delay	^tOFF	0	12	0	15	ns	17, 24, 29
OE# setup prior to RAS# during HIDDEN REFRESH cycle	^tORD	0		0		ns	

Micron Technology, Inc., reserves the right to change products or specifications without notice.
©2000, Micron Technology, Inc.

AC ELECTRICAL CHARACTERISTICS

(Notes: 5, 6, 7, 8, 9, 10, 11, 12) (V_{CC} = +3.3V ±0.3V)

AC CHARACTERISTICS		-5		-6			
PARAMETER	**SYMBOL**	**MIN**	**MAX**	**MIN**	**MAX**	**UNITS**	**NOTES**
EDO-PAGE-MODE READ or WRITE cycle time	^{t}PC	20		25		ns	34
EDO-PAGE-MODE READ-WRITE cycle time	$^{t}PRWC$	47		56		ns	34
Access time from RAS#	^{t}RAC		50		60	ns	
RAS# to column-address delay time	^{t}RAD	9		12		ns	15
Row address hold time	^{t}RAH	7		10		ns	
RAS# pulse width	^{t}RAS	50	10,000	60	10,000	ns	
RAS# pulse width (EDO PAGE MODE)	$^{t}RASP$	50	125,000	60	125,000	ns	
RAS# pulse width during Self Refresh	$^{t}RASS$	100		100		µs	
Random READ or WRITE cycle time	^{t}RC	84		104		ns	
RAS# to CAS# delay time	^{t}RCD	11		14		ns	14, 28
READ command hold time (referenced to CAS#)	^{t}RCH	0		0		ns	16, 30
READ command setup time	^{t}RCS	0		0		ns	28
Refresh period	^{t}REF		64		64	ms	22, 23
Refresh period (“S” version)	^{t}REF		128		128	ms	23
RAS# precharge time	^{t}RP	30		40		ns	
RAS# to CAS# precharge time	^{t}RPC	5		5		ns	
RAS# precharge time exiting Self Refresh	^{t}RPS	90		105		ns	
READ command hold time (referenced to RAS#)	^{t}RRH	0		0		ns	16
RAS# hold time	^{t}RSH	13		15		ns	35
READ-WRITE cycle time	^{t}RWC	116		140		ns	
RAS# to WE# delay time	^{t}RWD	67		79		ns	18
WRITE command to RAS# lead time	^{t}RWL	13		15		ns	
Transition time (rise or fall)	^{t}T	2	50	2	50	ns	
WRITE command hold time	^{t}WCH	8		10		ns	35
WRITE command hold time (referenced to RAS#)	^{t}WCR	38		45		ns	
WE# command setup time	^{t}WCS	0		0		ns	18, 28
WE# to outputs in High-Z	^{t}WHZ		12		15	ns	
WRITE command pulse width	^{t}WP	5		5		ns	
WE# pulse widths to disable outputs	^{t}WPZ	10		10		ns	
WE# hold time (CBR Refresh)	^{t}WRH	8		10		ns	
WE# setup time (CBR Refresh)	^{t}WRP	8		10		ns	

Micron Technology, Inc., reserves the right to change products or specifications without notice.
©2000, Micron Technology, Inc.

NOTES

1. All voltages referenced to V_{SS}.
2. This parameter is sampled. V_{CC} = +3.3V; f = 1 MHz; T_A = 25°C.
3. I_{CC} is dependent on output loading and cycle rates. Specified values are obtained with minimum cycle time and the outputs open.
4. Enables on-chip refresh and address counters.
5. The minimum specifications are used only to indicate cycle time at which proper operation over the full temperature range is ensured.
6. An initial pause of 100µs is required after power-up, followed by eight RAS# refresh cycles (RAS#-ONLY or CBR with WE# HIGH), before proper device operation is ensured. The eight RAS# cycle wake-ups should be repeated any time the ^tREF refresh requirement is exceeded.
7. AC characteristics assume ^tT = 2.5ns.
8. V_{IH} (MIN) and V_{IL} (MAX) are reference levels for measuring timing of input signals. Transition times are measured between V_{IH} and V_{IL} (or between V_{IL} and V_{IH}).
9. In addition to meeting the transition rate specification, all input signals must transit between V_{IH} and V_{IL} (or between V_{IL} and V_{IH}) in a monotonic manner.
10. If CAS# and RAS# = V_{IH}, data output is High-Z.
11. If CAS# = V_{IL}, data output may contain data from the last valid READ cycle.
12. Measured with a load equivalent to two TTL gates and 100pF; and V_{OL} = 0.8V and V_{OH} = 2V.
13. If CAS# is LOW at the falling edge of RAS#, output data will be maintained from the previous cycle. To initiate a new cycle and clear the data-out buffer, CAS# must be pulsed HIGH for ^tCP.
14. The ^tRCD (MAX) limit is no longer specified. ^tRCD (MAX) was specified as a reference point only. If ^tRCD was greater than the specified ^tRCD (MAX) limit, then access time was controlled exclusively by ^tCAC (^tRAC [MIN] no longer applied). With or without the ^tRCD limit, ^tAA and ^tCAC must always be met.
15. The ^tRAD (MAX) limit is no longer specified. ^tRAD (MAX) was specified as a reference point only. If ^tRAD was greater than the specified ^tRAD (MAX) limit, then access time was controlled exclusively by ^tAA (^tRAC and ^tCAC no longer applied). With or without the ^tRAD (MAX) limit, ^tAA, ^tRAC, and ^tCAC must always be met.
16. Either ^tRCH or ^tRRH must be satisfied for a READ cycle.
17. ^tOFF (MAX) defines the time at which the output achieves the open circuit condition and is not referenced to V_{OH} or V_{OL}.
18. ^tWCS, ^tRWD, ^tAWD, and ^tCWD are not restrictive operating parameters. ^tWCS applies to EARLY WRITE cycles. If $^tWCS > {}^tWCS$ (MIN), the cycle is an EARLY WRITE cycle and the data output will remain an open circuit throughout the entire cycle. ^tRWD, ^tAWD, and ^tCWD define READ-MODIFY-WRITE cycles. Meeting these limits allows for reading and disabling output data and then applying input data. OE# held HIGH and WE# taken LOW after CAS# goes LOW results in a LATE WRITE (OE#-controlled) cycle. ^tWCS, ^tRWD, ^tCWD, and ^tAWD are not applicable in a LATE WRITE cycle.
19. These parameters are referenced to CAS# leading edge in EARLY WRITE cycles and WE# leading edge in LATE WRITE or READ-MODIFY-WRITE cycles.
20. If OE# is tied permanently LOW, LATE WRITE, or READ-MODIFY-WRITE operations are not possible.
21. A HIDDEN REFRESH may also be performed after a WRITE cycle. In this case, WE# is LOW and OE# is HIGH.
22. RAS#-ONLY REFRESH requires that all 8,192 rows of the MT4LC4M16N3 or all 4,096 rows of the MT4LC4M16R6 be refreshed at least once every 64ms.
23. CBR REFRESH for either device requires that at least 4,096 cycles be completed every 64ms.
24. The DQs go High-Z during READ cycles once ^tOD or ^tOFF occur. If CAS# stays LOW while OE# is brought HIGH, the DQs will go High-Z. If OE# is brought back LOW (CAS# still LOW), the DQs will provide the previously read data.
25. LATE WRITE and READ-MODIFY-WRITE cycles must have both ^tOD and ^tOEH met (OE# HIGH during WRITE cycle) in order to ensure that the output buffers will be open during the WRITE cycle. If OE# is taken back LOW while CAS# remains LOW, the DQs will remain open.
26. Column address changed once each cycle.
27. The first CASx# edge to transition LOW.

Micron Technology, Inc., reserves the right to change products or specifications without notice.
©2000, Micron Technology, Inc.

NOTES (continued)

28. Output parameter (DQx) is referenced to corresponding CAS# input; DQ0-DQ7 by CASL# and DQ8-DQ15 by CASH#.
29. Each CASx# must meet minimum pulse width.
30. The last CASx# edge to transition HIGH.
31. Last falling CASx# edge to first rising CASx# edge.
32. Last rising CASx# edge to first falling CASx# edge.
33. Last rising CASx# edge to next cycle's last rising CASx# edge.
34. Last CASx# to go LOW.
35. V_{IH} overshoot: V_{IH} (MAX) = V_{CC} + 2V for a pulse width ≤ 3ns, and the pulse width cannot be greater than one third of the cycle rate. V_{IL} undershoot: V_{IL} (MIN) = -2V for a pulse width ≤ 3ns, and the pulse width cannot be greater than one third of the cycle rate.
36. NC pins are assumed to be left floating and are not tested for leakage.
37. Self refresh and extended refresh for either device requires that at least 4,096 cycles be completed every 128ms.

Micron Technology, Inc., reserves the right to change products or specifications without notice.
©2000, Micron Technology, Inc.

READ CYCLE

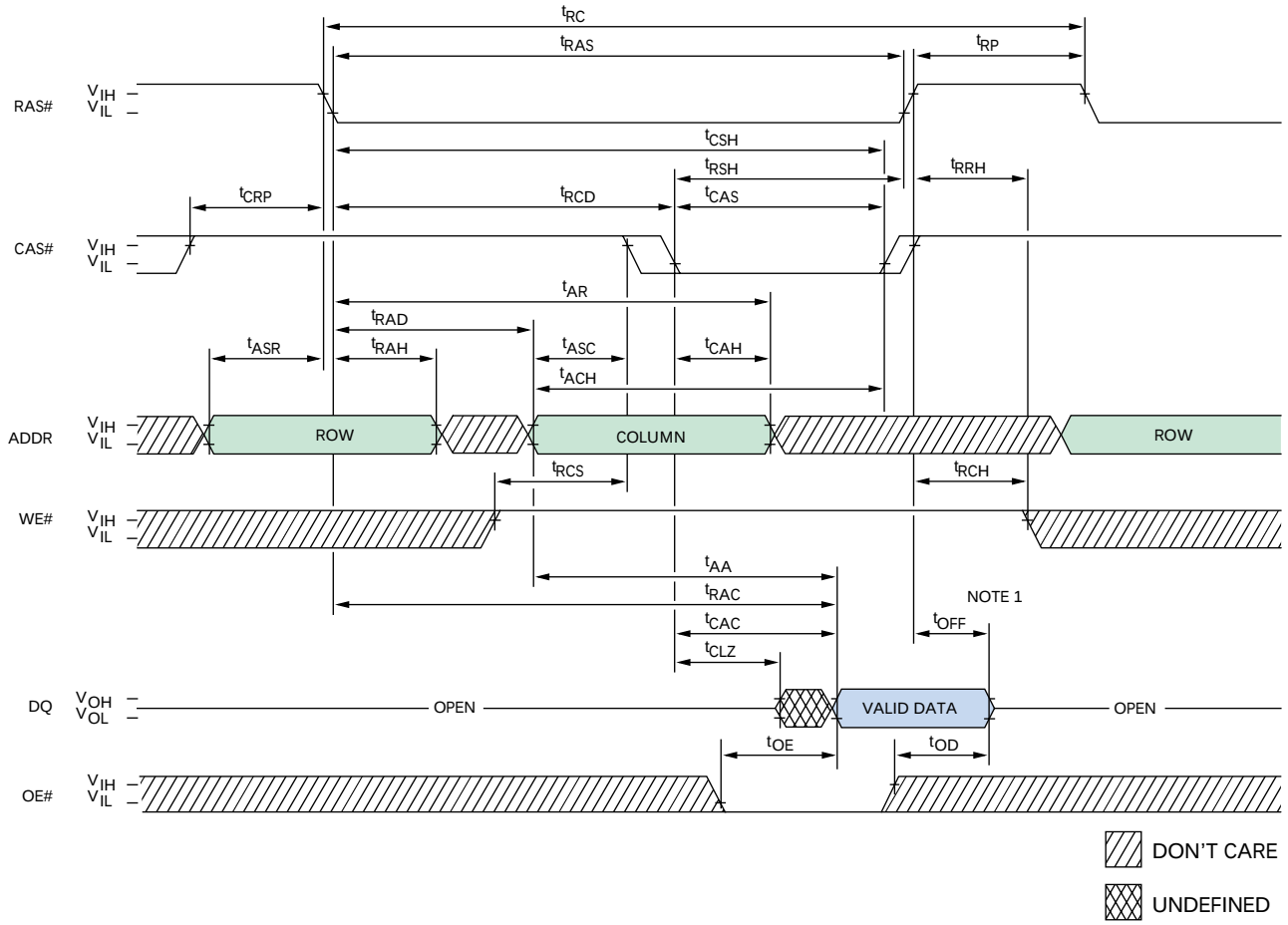

TIMING PARAMETERS

SYMBOL	-5 MIN	-5 MAX	-6 MIN	-6 MAX	UNITS
^{t}AA		25		30	ns
^{t}ACH	12		15		ns
^{t}AR	38		45		ns
^{t}ASC	0		0		ns
^{t}ASR	0		0		ns
^{t}CAC		13		15	ns
^{t}CAH	8		10		ns
^{t}CAS	8	10,000	10	10,000	ns
^{t}CLCH	5		5		ns
^{t}CLZ	0		0		ns
^{t}CRP	5		5		ns
^{t}CSH	38		45		ns
^{t}OD	0	12	0	15	ns

SYMBOL	-5 MIN	-5 MAX	-6 MIN	-6 MAX	UNITS
^{t}OE		12		15	ns
^{t}OFF	0	12	0	15	ns
^{t}RAC		50		60	ns
^{t}RAD	9		12		ns
^{t}RAH	7		10		ns
^{t}RAS	50	10,000	60	10,000	ns
^{t}RC	84		104		ns
^{t}RCD	11		14		ns
^{t}RCH	0		0		ns
^{t}RCS	0		0		ns
^{t}RP	30		40		ns
^{t}RRH	0		0		ns
^{t}RSH	13		15		ns

NOTE: 1. ^{t}OFF is referenced from rising edge of RAS# or CAS#, whichever occurs last.

Micron Technology, Inc., reserves the right to change products or specifications without notice.
©2000, Micron Technology, Inc.

EARLY WRITE CYCLE

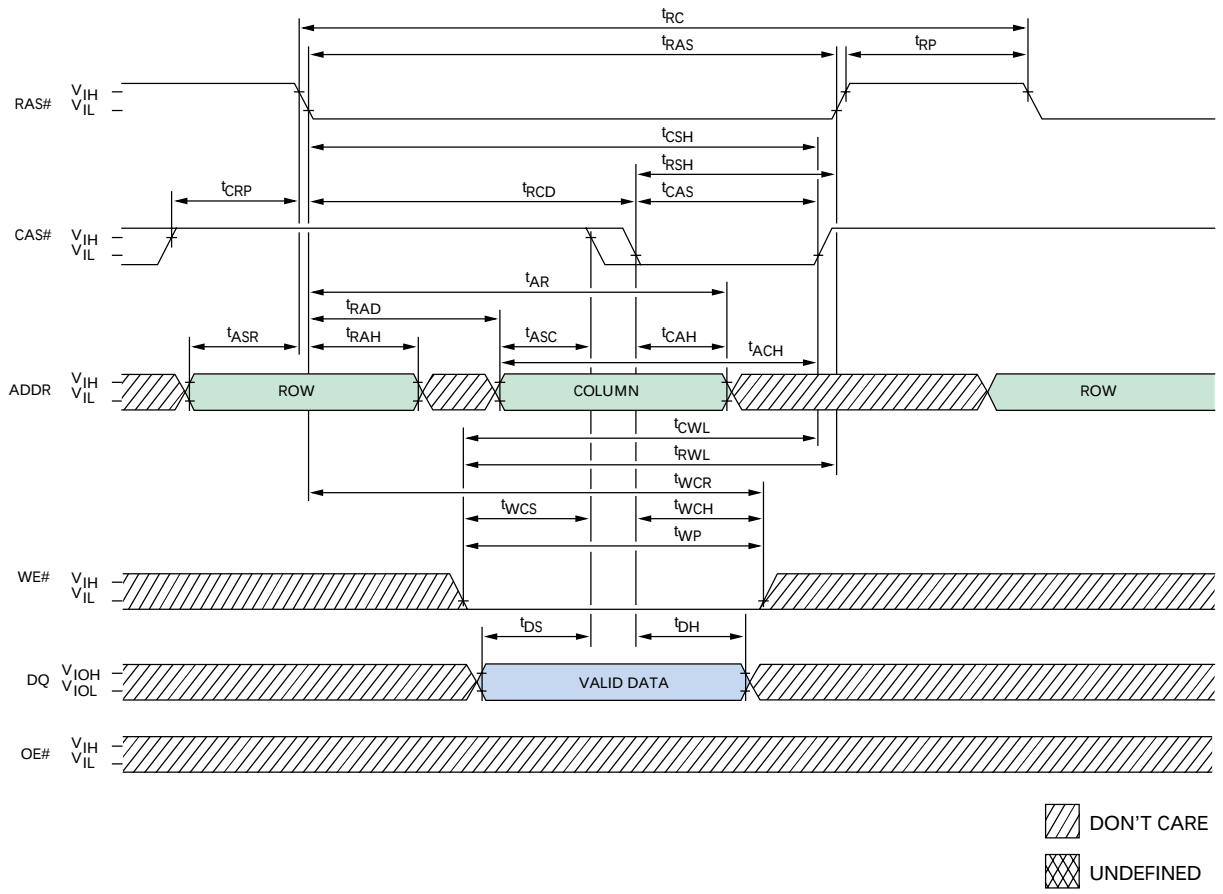

TIMING PARAMETERS

SYMBOL	-5 MIN	-5 MAX	-6 MIN	-6 MAX	UNITS
tACH	12		15		ns
tAR	38		45		ns
tASC	0		0		ns
tASR	0		0		ns
tCAH	8		10		ns
tCAS	8	10,000	10	10,000	ns
tCLCH	5		5		ns
tCRP	5		5		ns
tCSH	38		45		ns
tCWL	8		10		ns
tDH	8		10		ns
tDS	0		0		ns

SYMBOL	-5 MIN	-5 MAX	-6 MIN	-6 MAX	UNITS
tRAD	9		12		ns
tRAH	7		10		ns
tRAS	50	10,000	60	10,000	ns
tRC	84		104		ns
tRCD	11		14		ns
tRP	30		40		ns
tRSH	13		15		ns
tRWL	13		15		ns
tWCH	8		10		ns
tWCR	38		45		ns
tWCS	0		0		ns
tWP	5		5		ns

Micron Technology, Inc., reserves the right to change products or specifications without notice.
©2000, Micron Technology, Inc.

READ-WRITE CYCLE
(LATE WRITE and READ-MODIFY-WRITE cycles)

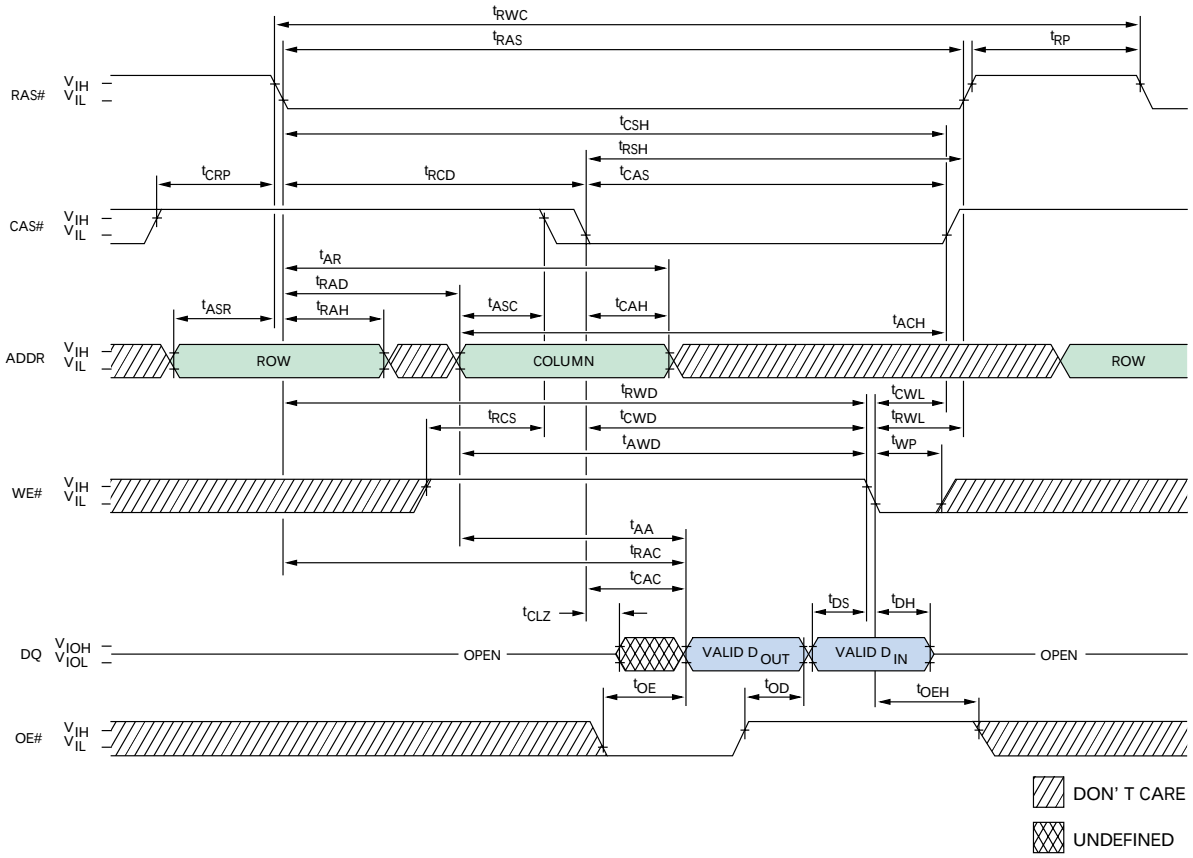

TIMING PARAMETERS

SYMBOL	-5 MIN	-5 MAX	-6 MIN	-6 MAX	UNITS
tAA		25		30	ns
tACH	12		15		ns
tAR	38		45		ns
tASC	0		0		ns
tASR	0		0		ns
tAWD	42		49		ns
tCAC		13		15	ns
tCAH	8		10		ns
tCAS	8	10,000	10	10,000	ns
tCLCH	5		5		ns
tCLZ	0		0		ns
tCRP	5		5		ns
tCSH	38		45		ns
tCWD	28		35		ns
tCWL	8		10		ns
tDH	8		10		ns

SYMBOL	-5 MIN	-5 MAX	-6 MIN	-6 MAX	UNITS
tDS	0		0		ns
tOD	0	12	0	15	ns
tOE		12		15	ns
tOEH	8		10		ns
tRAC		50		60	ns
tRAD	9		12		ns
tRAH	7		10		ns
tRAS	50	10,000	60	10,000	ns
tRCD	11		14		ns
tRCS	0		0		ns
tRP	30		40		ns
tRSH	13		15		ns
tRWC	116		140		ns
tRWD	67		79		ns
tRWL	13		15		ns
tWP	5		5		ns

Micron Technology, Inc., reserves the right to change products or specifications without notice.
©2000, Micron Technology, Inc.

EDO-PAGE-MODE READ CYCLE

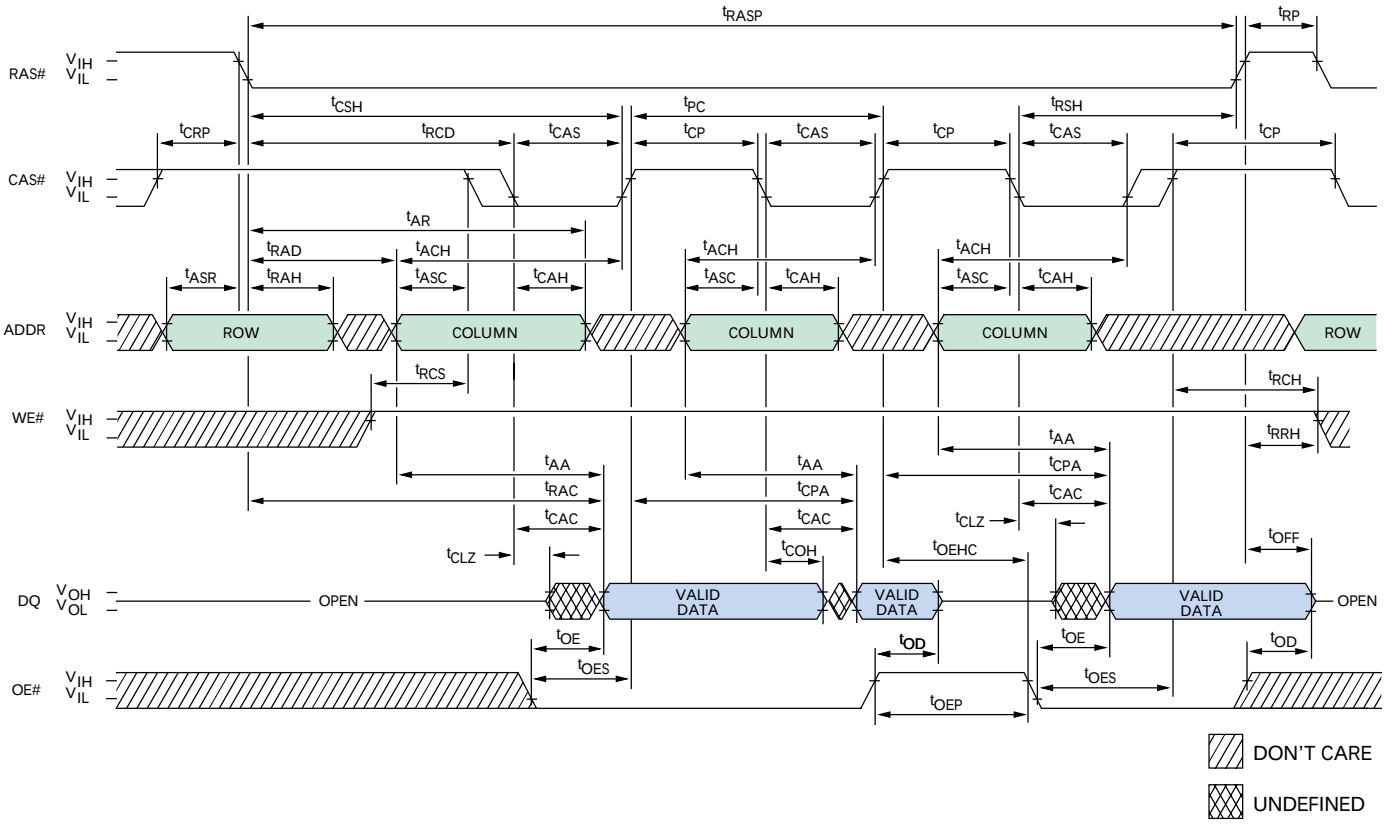

TIMING PARAMETERS

SYMBOL	-5 MIN	-5 MAX	-6 MIN	-6 MAX	UNITS
tAA		25		30	ns
tACH	12		15		ns
tAR	38		45		ns
tASC	0		0		ns
tASR	0		0		ns
tCAC		13		15	ns
tCAH	8		10		ns
tCAS	8	10,000	10	10,000	ns
tCLCH	5		5		ns
tCLZ	0		0		ns
tCOH	3		3		ns
tCP	8		10		ns
tCPA		28		35	ns
tCRP	5		5		ns
tCSH	38		45		ns
tOD	0	12	0	15	ns

SYMBOL	-5 MIN	-5 MAX	-6 MIN	-6 MAX	UNITS
tOE		12		15	ns
tOEHC	5		10		ns
tOEP	5		5		ns
tOES	4		5		ns
tOFF	0	12	0	15	ns
tPC	20		25		ns
tRAC		50		60	ns
tRAD	9		12		ns
tRAH	7		10		ns
tRASP	50	125,000	60	125,000	ns
tRCD	11		14		ns
tRCH	0		0		ns
tRCS	0		0		ns
tRP	30		40		ns
tRRH	0		0		ns
tRSH	13		15		ns

Micron Technology, Inc., reserves the right to change products or specifications without notice.
©2000, Micron Technology, Inc.

EDO-PAGE-MODE EARLY WRITE CYCLE

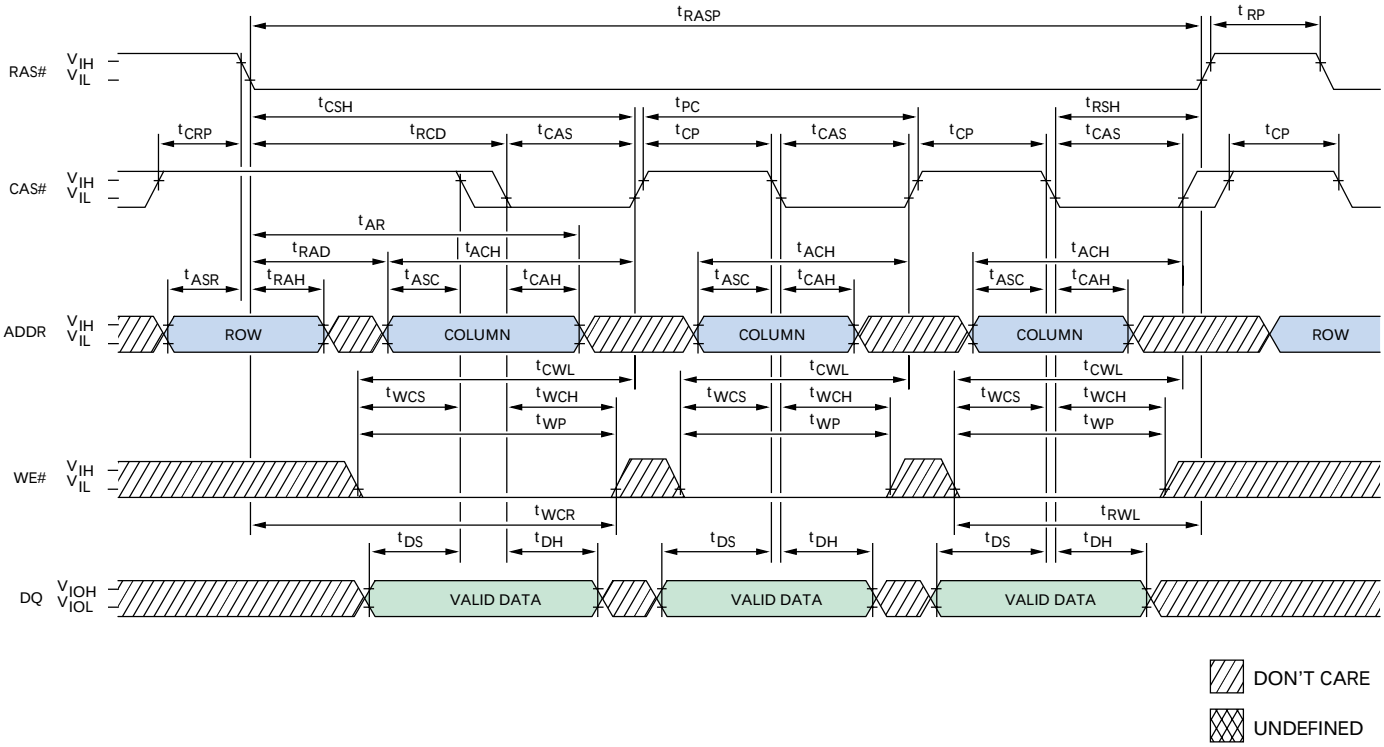

TIMING PARAMETERS

SYMBOL	-5 MIN	-5 MAX	-6 MIN	-6 MAX	UNITS
tACH	12		15		ns
tAR	38		45		ns
tASC	0		0		ns
tASR	0		0		ns
tCAH	8		10		ns
tCAS	8	10,000	10	10,000	ns
tCLCH	5		5		ns
tCP	8		10		ns
tCRP	5		5		ns
tCSH	38		45		ns
tCWL	8		10		ns
tDH	8		10		ns
tDS	0		0		ns

SYMBOL	-5 MIN	-5 MAX	-6 MIN	-6 MAX	UNITS
tPC	20		25		ns
tRAD	9		12		ns
tRAH	7		10		ns
tRASP	50	125,000	60	125,000	ns
tRCD	11		14		ns
tRP	30		40		ns
tRSH	13		15		ns
tRWL	13		15		ns
tWCH	8		10		ns
tWCR	38		45		ns
tWCS	0		0		ns
tWP	5		5		ns

Micron Technology, Inc., reserves the right to change products or specifications without notice.
©2000, Micron Technology, Inc.

EDO-PAGE-MODE READ-WRITE CYCLE
(LATE WRITE and READ-MODIFY-WRITE cycles)

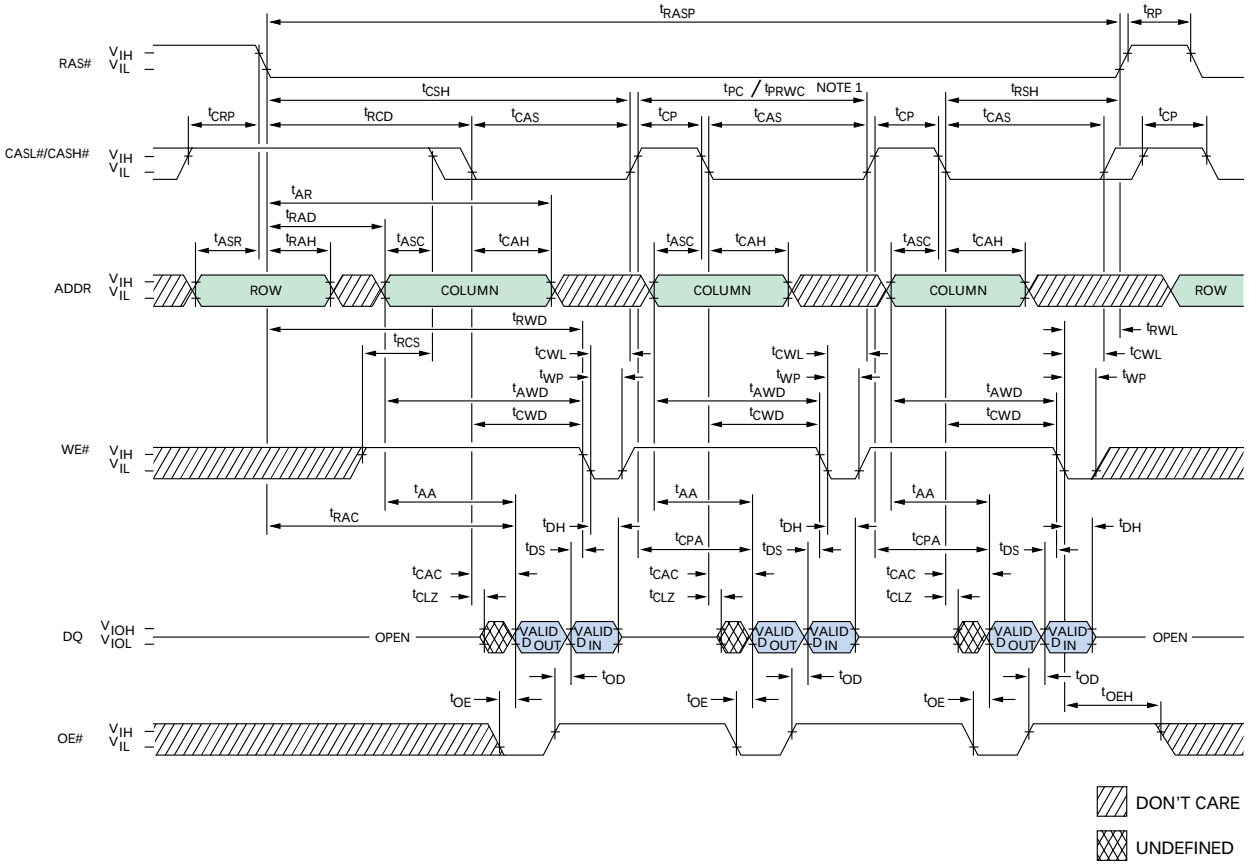

TIMING PARAMETERS

SYMBOL	-5 MIN	-5 MAX	-6 MIN	-6 MAX	UNITS
tAA		25		30	ns
tAR	38		45		ns
tASC	0		0		ns
tASR	0		0		ns
tAWD	42		49		ns
tCAC		13		15	ns
tCAH	8		10		ns
tCAS	8	10,000	10	10,000	ns
tCLCH	5		5		ns
tCLZ	0		0		ns
tCP	8		10		ns
tCPA		28		35	ns
tCRP	5		5		ns
tCSH	38		45		ns
tCWD	28		35		ns
tCWL	8		10		ns
tDH	8		10		ns

SYMBOL	-5 MIN	-5 MAX	-6 MIN	-6 MAX	UNITS
tDS	0		0		ns
tOD	0	12	0	15	ns
tOE		12		15	ns
tOEH	8		10		ns
tPC	20		25		ns
tPRWC	47		56		ns
tRAC		50		60	ns
tRAD	9		12		ns
tRAH	7		10		ns
tRASP	50	125,000	60	125,000	ns
tRCD	11		14		ns
tRCS	0		0		ns
tRP	30		40		ns
tRSH	13		15		ns
tRWD	67		79		ns
tRWL	13		15		ns
tWP	5		5		ns

NOTE: 1. tPC is for LATE WRITE cycles only.

Micron Technology, Inc., reserves the right to change products or specifications without notice.
©2000, Micron Technology, Inc.

EDO-PAGE-MODE READ EARLY WRITE CYCLE
(Pseudo READ-MODIFY-WRITE)

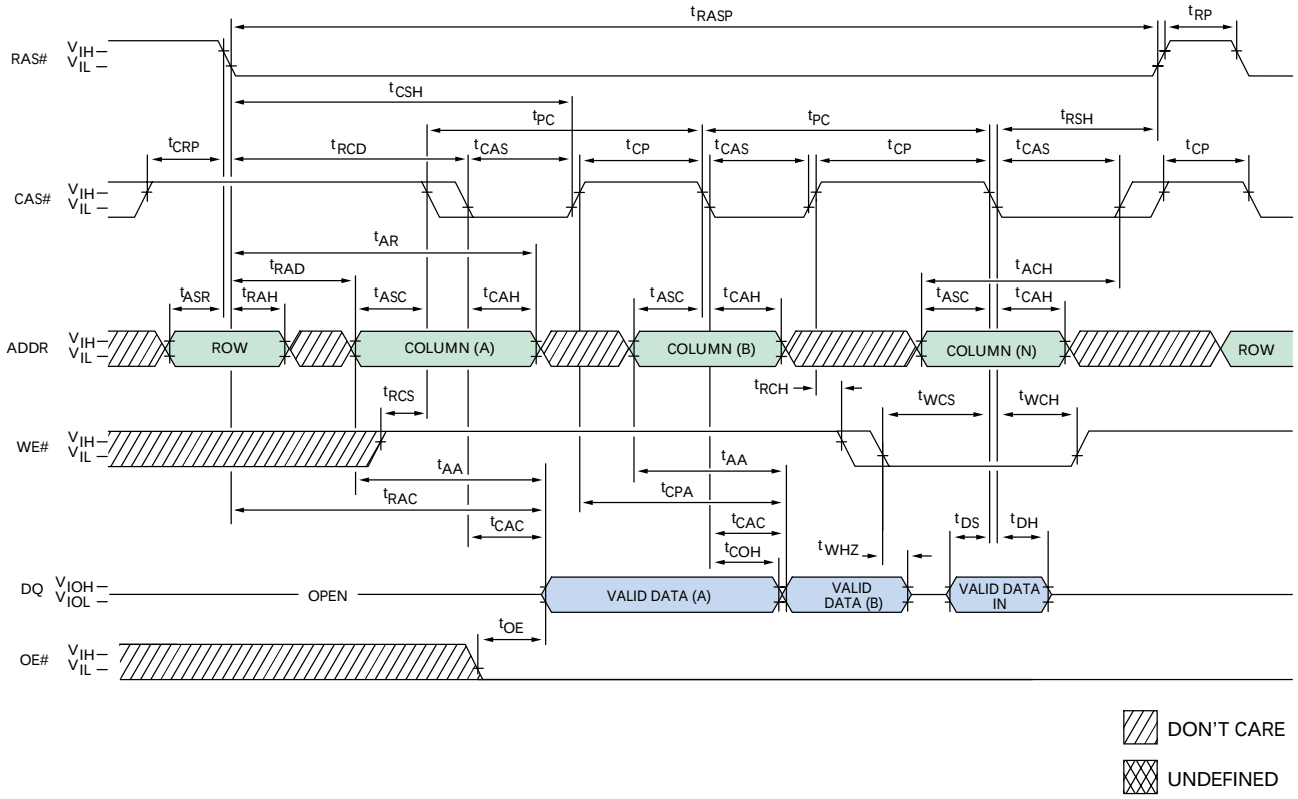

TIMING PARAMETERS

SYMBOL	-5 MIN	-5 MAX	-6 MIN	-6 MAX	UNITS
tAA		25		30	ns
tACH	12		15		ns
tAR	38		45		ns
tASC	0		0		ns
tASR	0		0		ns
tCAC		13		15	ns
tCAH	8		10		ns
tCAS	8	10,000	10	10,000	ns
tCOH	3		3		ns
tCP	8		10		ns
tCPA		28		35	ns
tCRP	5		5		ns
tCSH	38		45		ns
tDH	8		10		ns
tDS	0		0		ns

SYMBOL	-5 MIN	-5 MAX	-6 MIN	-6 MAX	UNITS
tOE		12		15	ns
tPC	20		25		ns
tRAC		50		60	ns
tRAD	9		12		ns
tRAH	7		10		ns
tRASP	50	125,000	60	125,000	ns
tRCD	11		14		ns
tRCH	0		0		ns
tRCS	0		0		ns
tRP	30		40		ns
tRSH	13		15		ns
tWCH	8		10		ns
tWCS	0		0		ns
tWHZ		12		15	ns

Micron Technology, Inc., reserves the right to change products or specifications without notice.
©2000, Micron Technology, Inc.

READ CYCLE
(with WE#-controlled disable)

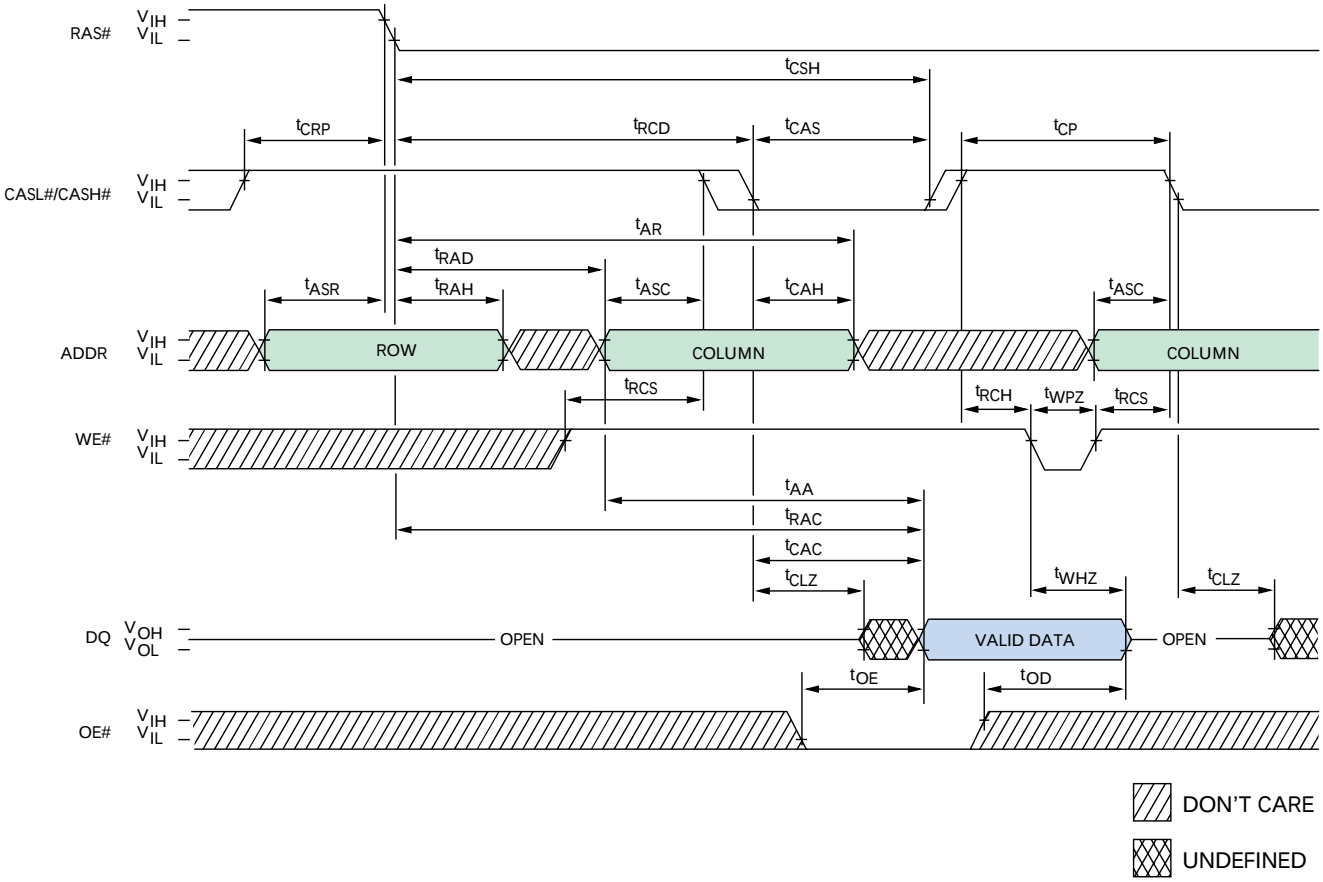

TIMING PARAMETERS

SYMBOL	-5 MIN	-5 MAX	-6 MIN	-6 MAX	UNITS
tAA		25		30	ns
tAR	38		45		ns
tASC	0		0		ns
tASR	0		0		ns
tCAC		13		15	ns
tCAH	8		10		ns
tCAS	8	10,000	10	10,000	ns
tCLZ	0		0		ns
tCP	8		10		ns
tCRP	5		5		ns
tCSH	38		45		ns

SYMBOL	-5 MIN	-5 MAX	-6 MIN	-6 MAX	UNITS
tOD	0	12	0	15	ns
tOE		12		15	ns
tRAC		50		60	ns
tRAD	9		12		ns
tRAH	7		10		ns
tRCD	11		14		ns
tRCH	0		0		ns
tRCS	0		0		ns
tWHZ		12		15	ns
tWPZ	10		10		ns

Micron Technology, Inc., reserves the right to change products or specifications without notice.
©2000, Micron Technology, Inc.

RAS#-ONLY REFRESH CYCLE

(OE# and WE# = DON'T CARE)

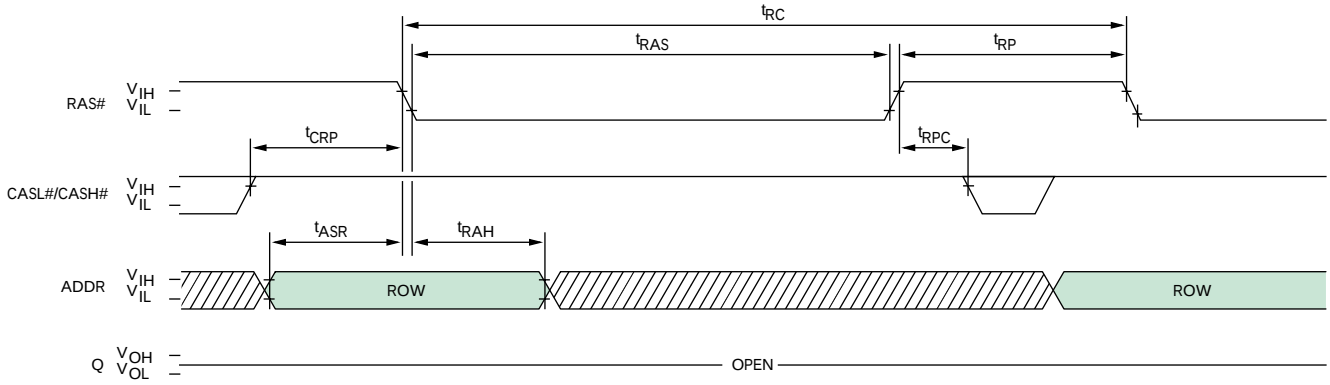

CBR REFRESH CYCLE

(Addresses and OE# = DON'T CARE)

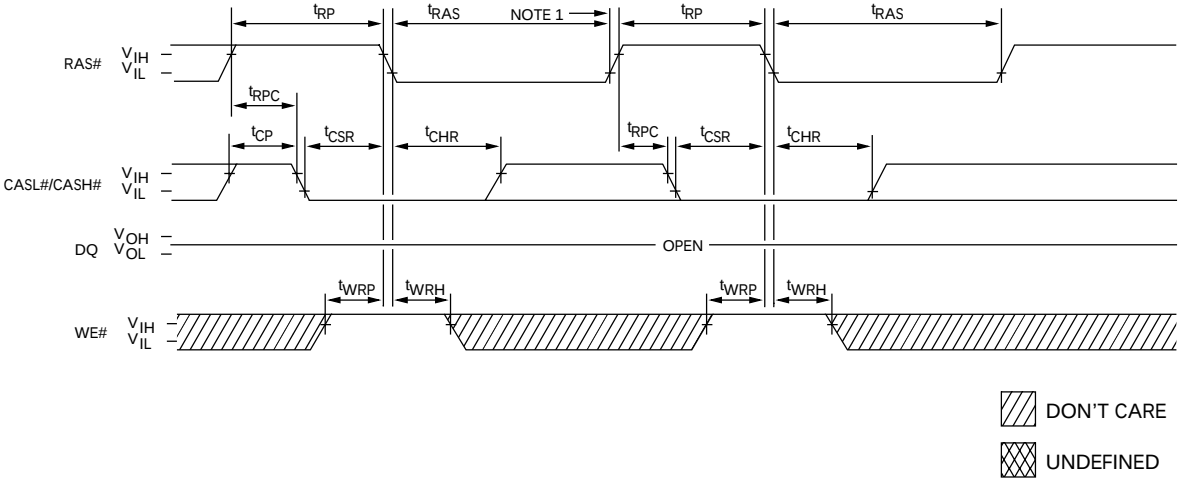

TIMING PARAMETERS

SYMBOL	-5 MIN	-5 MAX	-6 MIN	-6 MAX	UNITS
tASR	0		0		ns
tCHR	8		10		ns
tCP	8		10		ns
tCRP	5		5		ns
tCSR	5		5		ns
tRAH	7		10		ns

SYMBOL	-5 MIN	-5 MAX	-6 MIN	-6 MAX	UNITS
tRAS	50	10,000	60	10,000	ns
tRC	84		104		ns
tRP	30		40		ns
tRPC	5		5		ns
tWRH	8		10		ns
tWRP	8		10		ns

NOTE: 1. End of first CBR REFRESH cycle.

Micron Technology, Inc., reserves the right to change products or specifications without notice.
©2000, Micron Technology, Inc.

HIDDEN REFRESH CYCLE [1]

(WE# = HIGH; OE# = LOW)

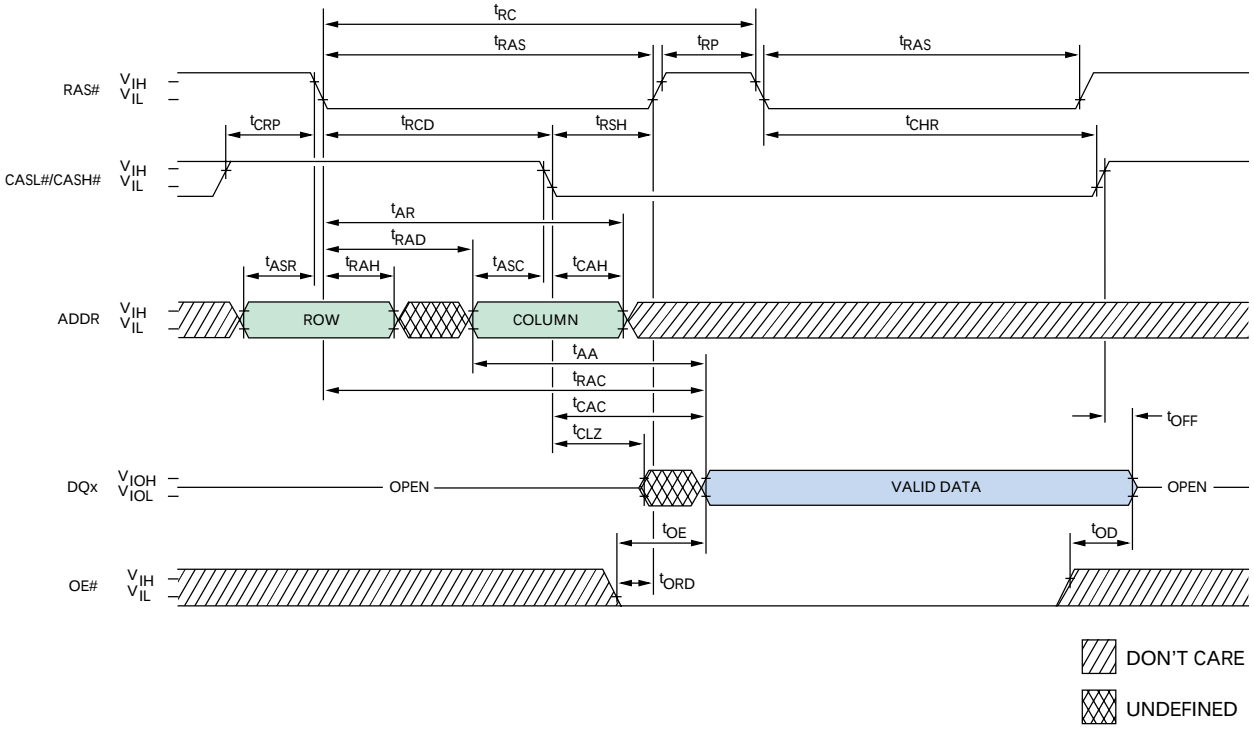

TIMING PARAMETERS

SYMBOL	-5 MIN	-5 MAX	-6 MIN	-6 MAX	UNITS
^{t}AA		25		30	ns
^{t}AR	38		45		ns
^{t}ASC	0		0		ns
^{t}ASR	0		0		ns
^{t}CAC		13		15	ns
^{t}CAH	8		10		ns
^{t}CHR	8		10		ns
^{t}CLZ	0		0		ns
^{t}CRP	5		5		ns
^{t}OD	0	12	0	15	ns

SYMBOL	-5 MIN	-5 MAX	-6 MIN	-6 MAX	UNITS
^{t}OE		12		15	ns
^{t}OFF	0	12	0	15	ns
^{t}ORD	0		0		ns
^{t}RAC		50		60	ns
^{t}RAD	9		12		ns
^{t}RAH	7		10		ns
^{t}RAS	50	10,000	60	10,000	ns
^{t}RCD	11		14		ns
^{t}RP	30		40		ns
^{t}RSH	13		15		ns

NOTE: 1. A HIDDEN REFRESH may also be performed after a WRITE cycle. In this case, WE# is LOW and OE# is HIGH.

Micron Technology, Inc., reserves the right to change products or specifications without notice.
©2000, Micron Technology, Inc.

SELF REFRESH CYCLE
(Addresses and OE# = DON'T CARE)

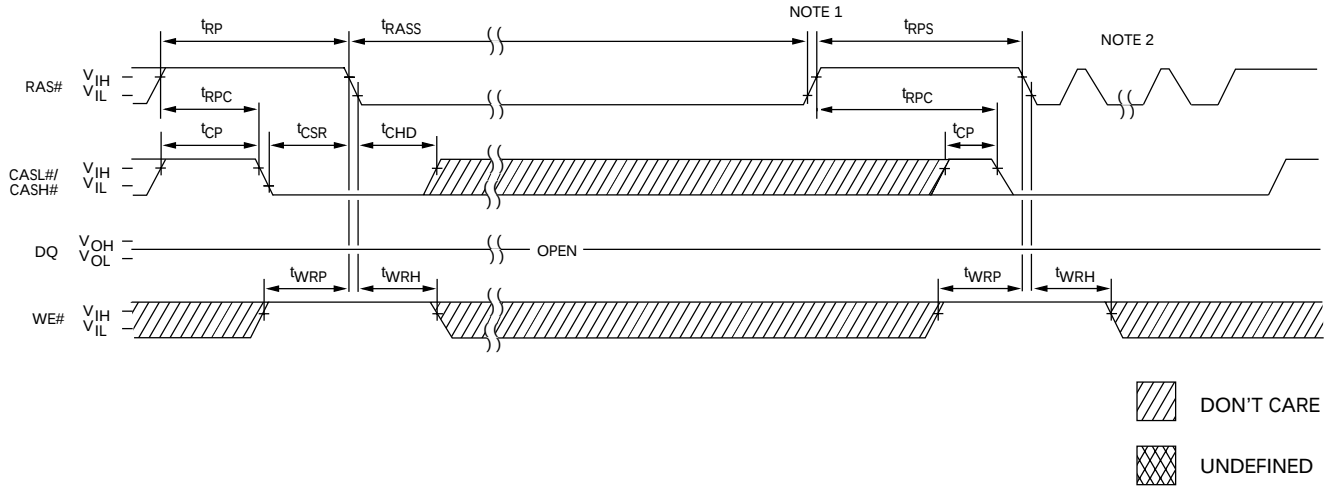

TIMING PARAMETERS

SYMBOL	-5 MIN	-5 MAX	-6 MIN	-6 MAX	UNITS
tCHD	15		15		ns
tCLCH	5		5		ns
tCP	8		10		ns
tCSR	5		5		ns
tRASS	100		100		ns

SYMBOL	-5 MIN	-5 MAX	-6 MIN	-6 MAX	UNITS
tRP	30		40		ns
tRPC	5		5		ns
tRPS	90		105		ns
tWRH	8		10		ns
tWRP	8		10		ns

NOTE: 1. Once tRASS (MIN) is met and RAS# remains LOW, the DRAM will enter self refresh mode.
2. Once tRPS is satisfied, a complete burst of all rows should be executed if RAS#-only or burst CBR refresh is used.

Micron Technology, Inc., reserves the right to change products or specifications without notice.
©2000, Micron Technology, Inc.

50-PIN PLASTIC TSOP (400 mil)

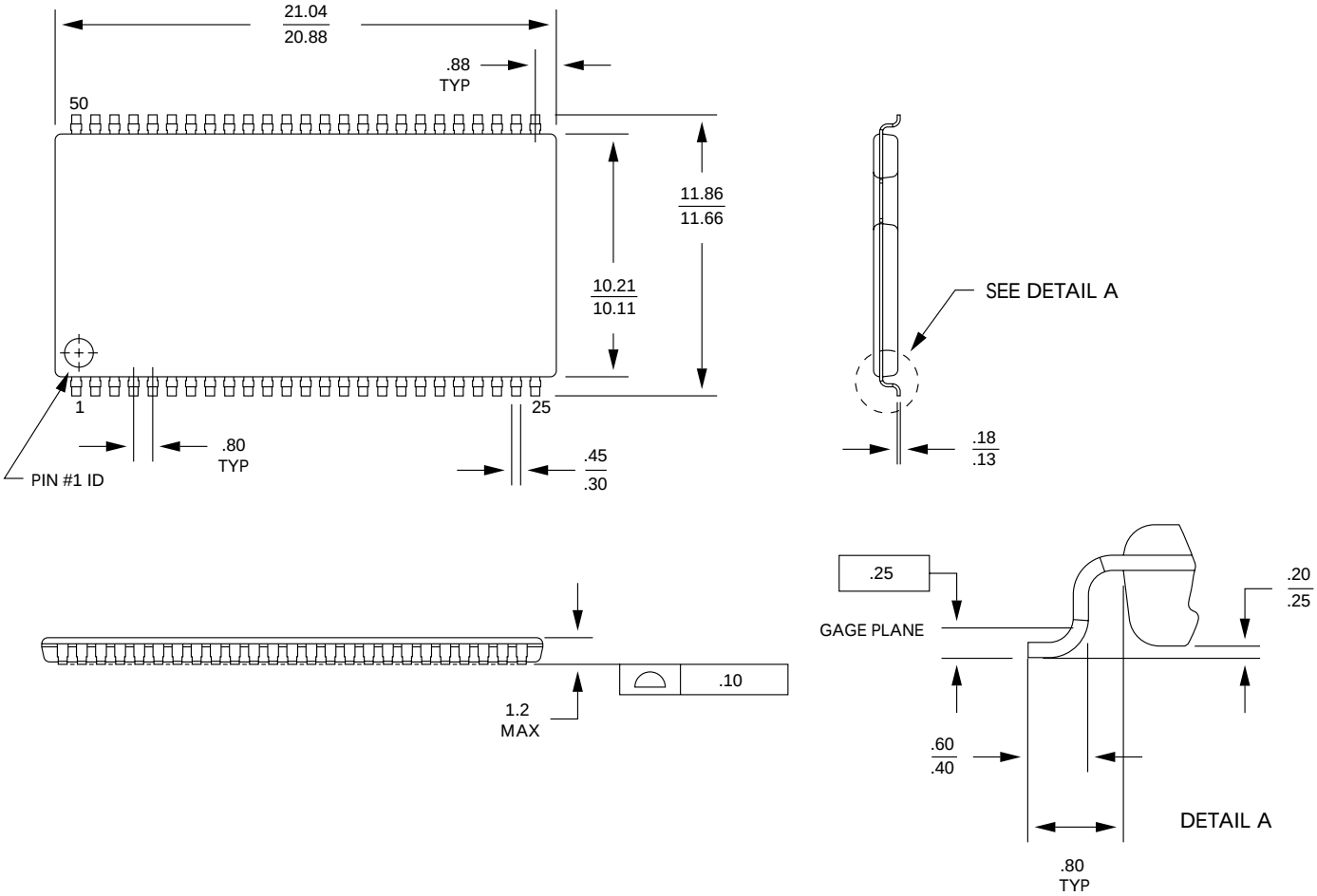

NOTE: 1. All dimensions in millimeters $\frac{\text{MAX}}{\text{MIN}}$ or typical where noted.

2. Package width and length do not include mold protrusion; allowable mold protrusion is .25mm per side.

8000 S. Federal Way, P.O. Box 6, Boise, ID 83707-0006, Tel: 208-368-3900
E-mail: prodmktg@micron.com, Internet: http://www.micron.com, Customer Comment Line: 800-932-4992
Micron is a registered trademark of Micron Technology, Inc.

Micron Technology, Inc., reserves the right to change products or specifications without notice.
©2000, Micron Technology, Inc.